Signature	Revision History	Date	Rev.
Gary Chen	For First Release	2011/11/23	01

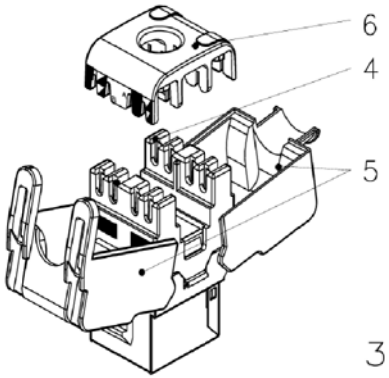

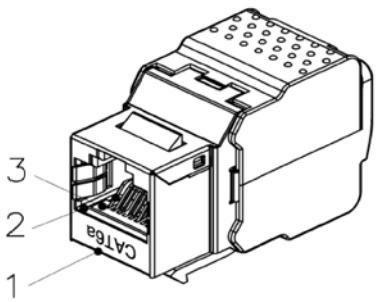

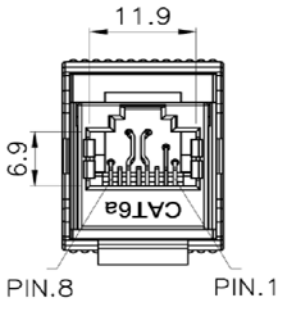

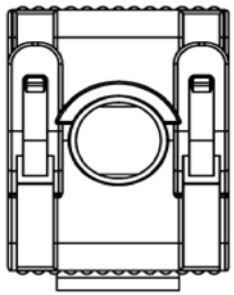

Material:

1. RJ45 Jack
   Housing: ABS+PC, UL 94V-0.
   Contact Bracket: PC, UL 94V-HB, Transparent color.
2. RJ45 Jack Contact:
   Material: Phosphor Bronze with Nickel plated.
   Finishing: 50 micro-inch Gold-plated on contact area.
3. Cap A&B: Zinc Die-Casting with Nickel plated.
4. IDC Housing: PC+Glass Fiber, UL 94V-HB.
   IDC Terminal: Phosphor Bronze with Tin plated.
   IDC CAP: PC+Glass Fiber, UL94V-0.
5. Shield: Bronze ith Nickel plated.
6. PCB: FR4, UL 94V-0.

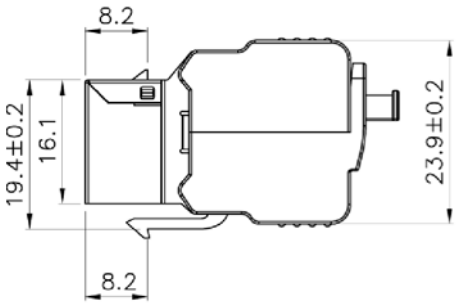

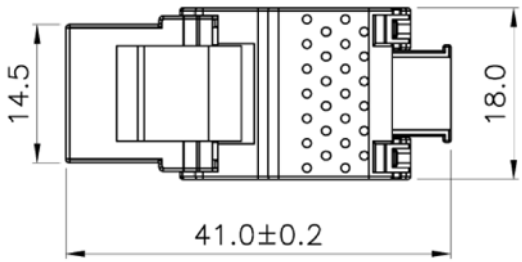

Performance:

1. T568A & T568B wiring.
2. Insertion force: 30N max. (IEC 60603-7-5).
3. Retention strength: 7.7 kg between Jack and Plug.
4. Operating temperature: -10°C to 60°C. (ISO/IEC 11801,ANSI/TIA/EIA 568 B.2)
5. Life (mating cycles):
   Jack: 750 cycles min. (ISO/IEC 11801, IEC 60603-7-5)
   IDC: Suitable for 22-26 AWG stranded and solid wire,
   compatible with both 110&Krone punch down tools.
6. Tool-less: When using the IDC Cap for wire management.
7. The CAT.6a performance is in compliance with ANSI/TIA/EIA 568 B.2-10 standard.

	Date	Name
Drawn By	Nov,23,2011	G.CHeN
Checked By	Nov,23,2011	Andreas.N
Approved By		

ST81028

DIGITUS Professional

Part No.

DN-93612

Title:

DIGITUS CAT.6a KEYSTONE JACK
FULL SHIELDED, TOOL-LESS TYPE

Scale	N/A	Sheet
Unit	MM	1/1