RevNo.	Revision note	Date	Signature	Checked

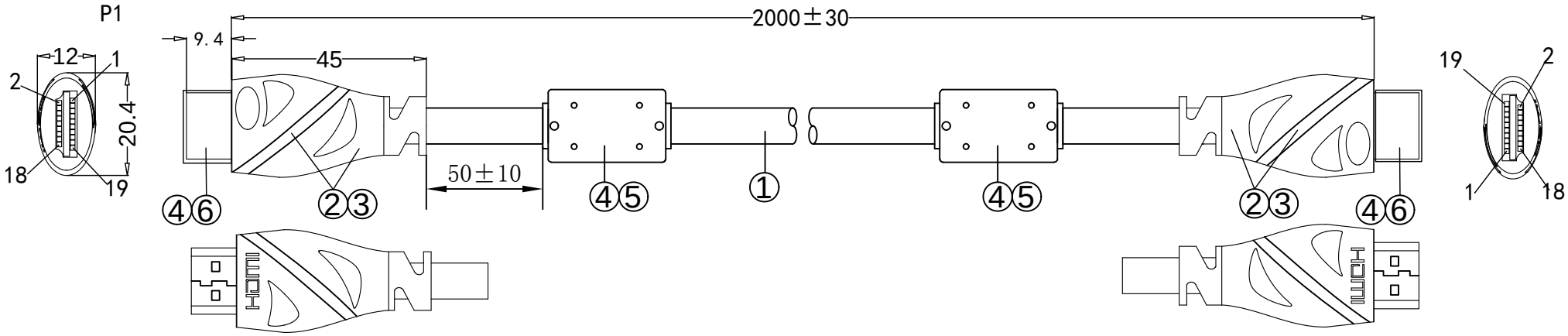

NOTES:

1. OPEN/SHORT/INTERMITTENCE:100%.
2. INSULATION RESISTANCE:DC 300V 0.01S 10MΩMin
3. CONDUCTIVE RESISTANCE:5ΩMax
4. RESOLUTION:7680*4320@60Hz
5. RoHS & REACH COMPLIANT

PIN OUT

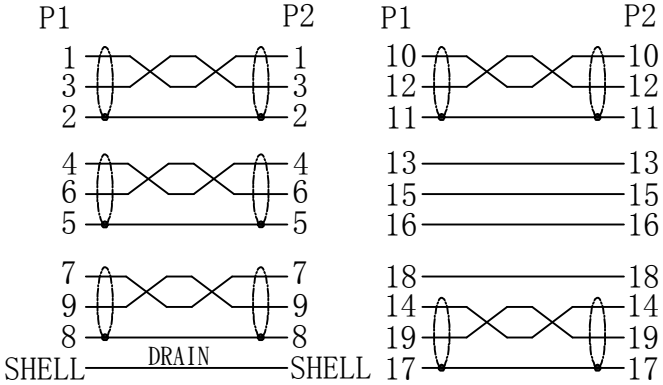

NO.	MATERIAL	DESCRIPTION	QTY.	UNIT
⑥	DUST CAP	HDMI A MALE DUST CAP / LDPE	2	PCS
⑤	FERRITE	⌀12*20*⌀8	2	PCS
④	MOLDED	45P BLACK PVC		G
③	SHIELD SHELL	TINPLATE	2	PCS
②	CONNECTOR	HDMI 19PIN MALE THE PIN GOLD PLATED,BLACK INSULATION,GOLD PLATED SHELL	2	PCS
①	CABLE	(1/0.254BC*2C+D+AL+BOPP TAPE)*4+(1/0.254BC*1P+D+AL/MYLAR)+1/0.254BC*4C+ADB BLACK PVC JACKET OD:6.0±0.2mm MARKING: Ultra Speed HDMI TM Cable with Ethernet E****** AWM STYLE 20276 80℃ 30V VW-1	2000	MM

Ltemref	Quantity	Title/Name,designation,material,dimension etc		Article NO./Reference	
Designed by FLY		Checkde by HELEN	Approved by - date 2022.12.22	File name	Date 2022.12.22	Scale FREE
ANGLE:		beek		BC-DSP-HA-MM-8K21-02	
UNIT:MM					Edition 1	Sheet 1/1